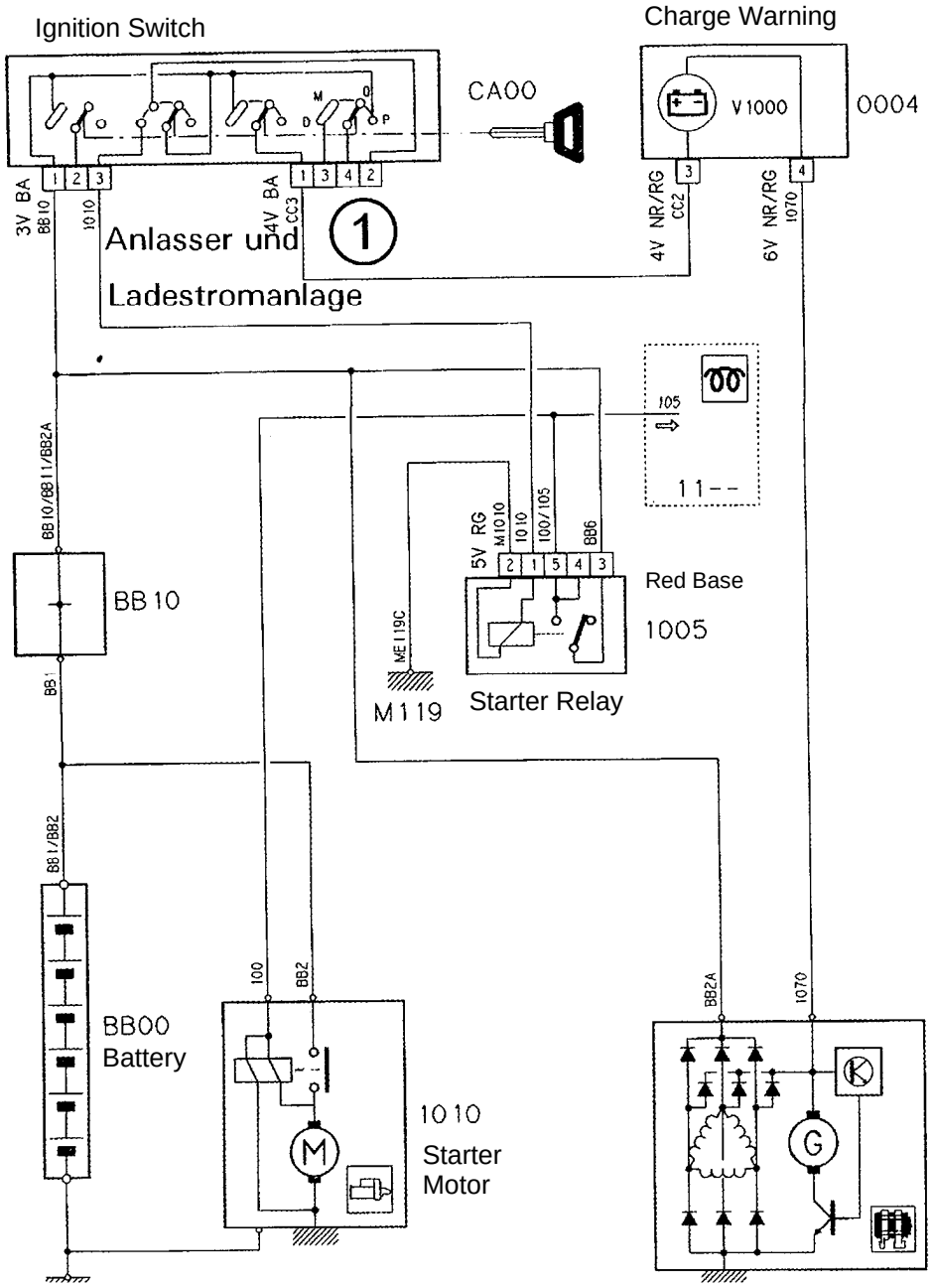

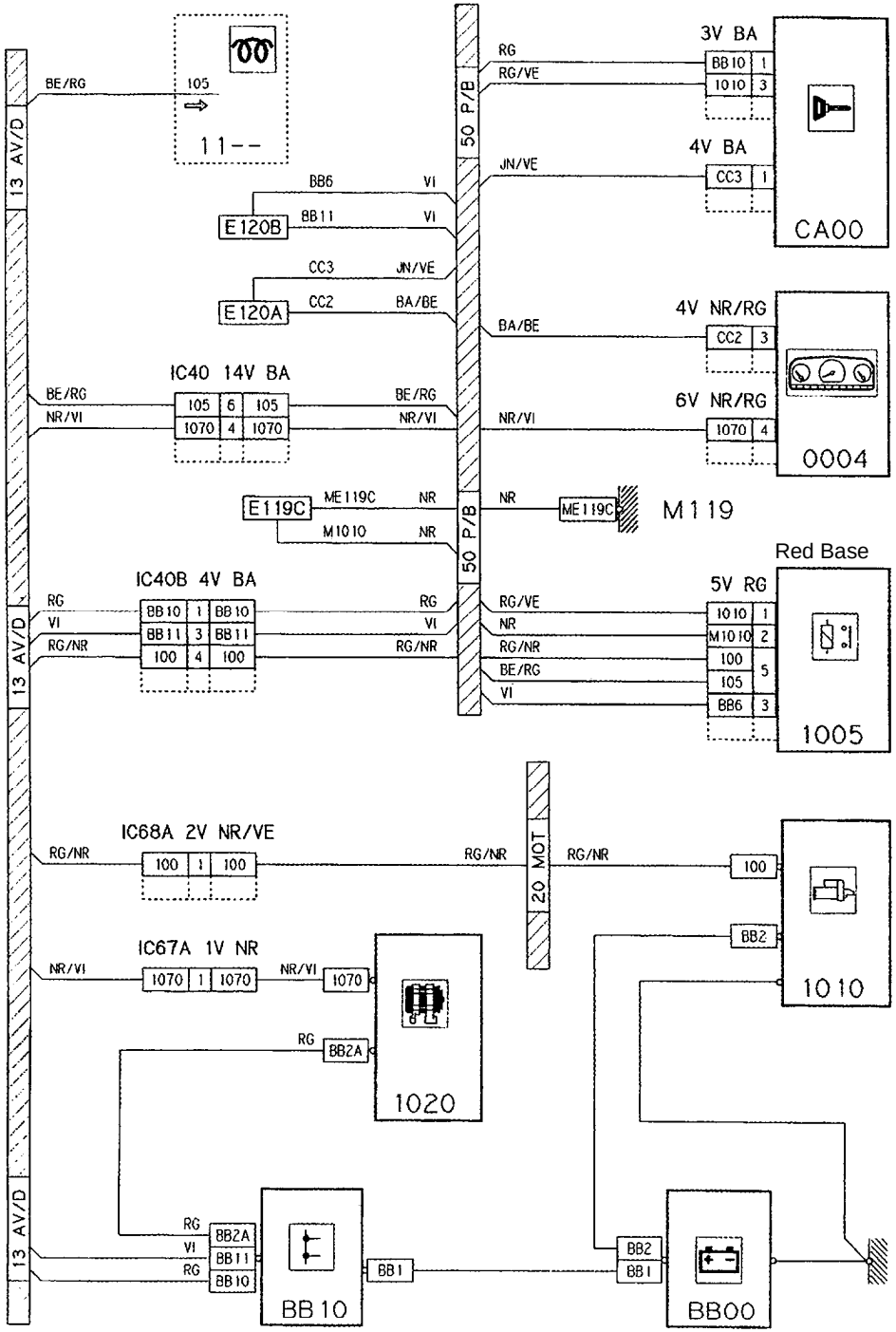

BA = White
BE = Blue
BG = Beige
GR = Grey
JN = Yellow
MR = Brown
MV = Purple

NR = Black
OR = Orange
RG = Red
RS = Pink
VE = Green
VI = Violet
AY = Lt Blue