Side & Tail Lights

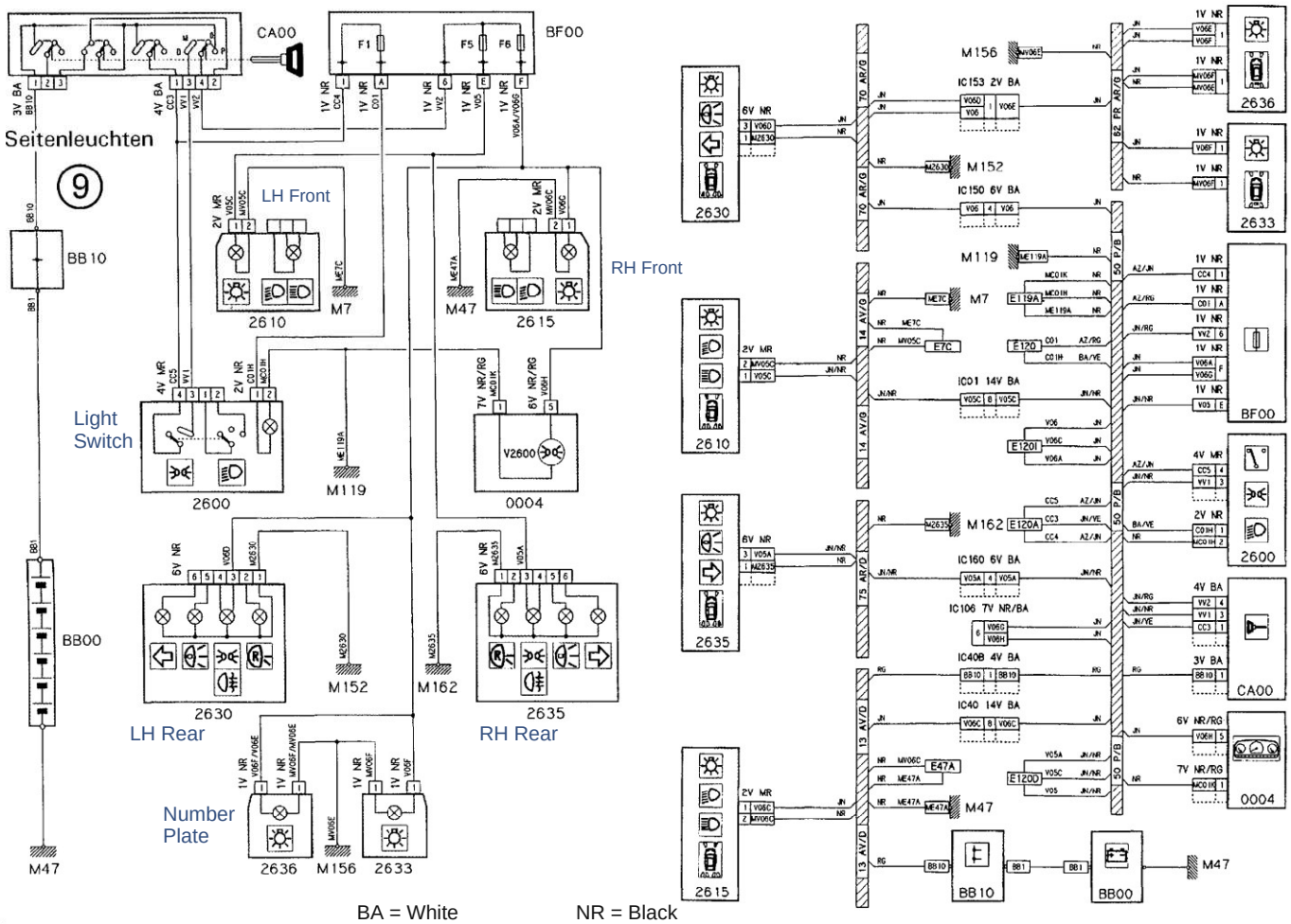

BA = White	NR = Black
BE = Blue	OR = Orange
BG = Beige	RG = Red
GR = Grey	RS = Pink
JN = Yellow	VE = Green
MR = Brown	VI = Violet
MV = Purple	AY = Lt Blue