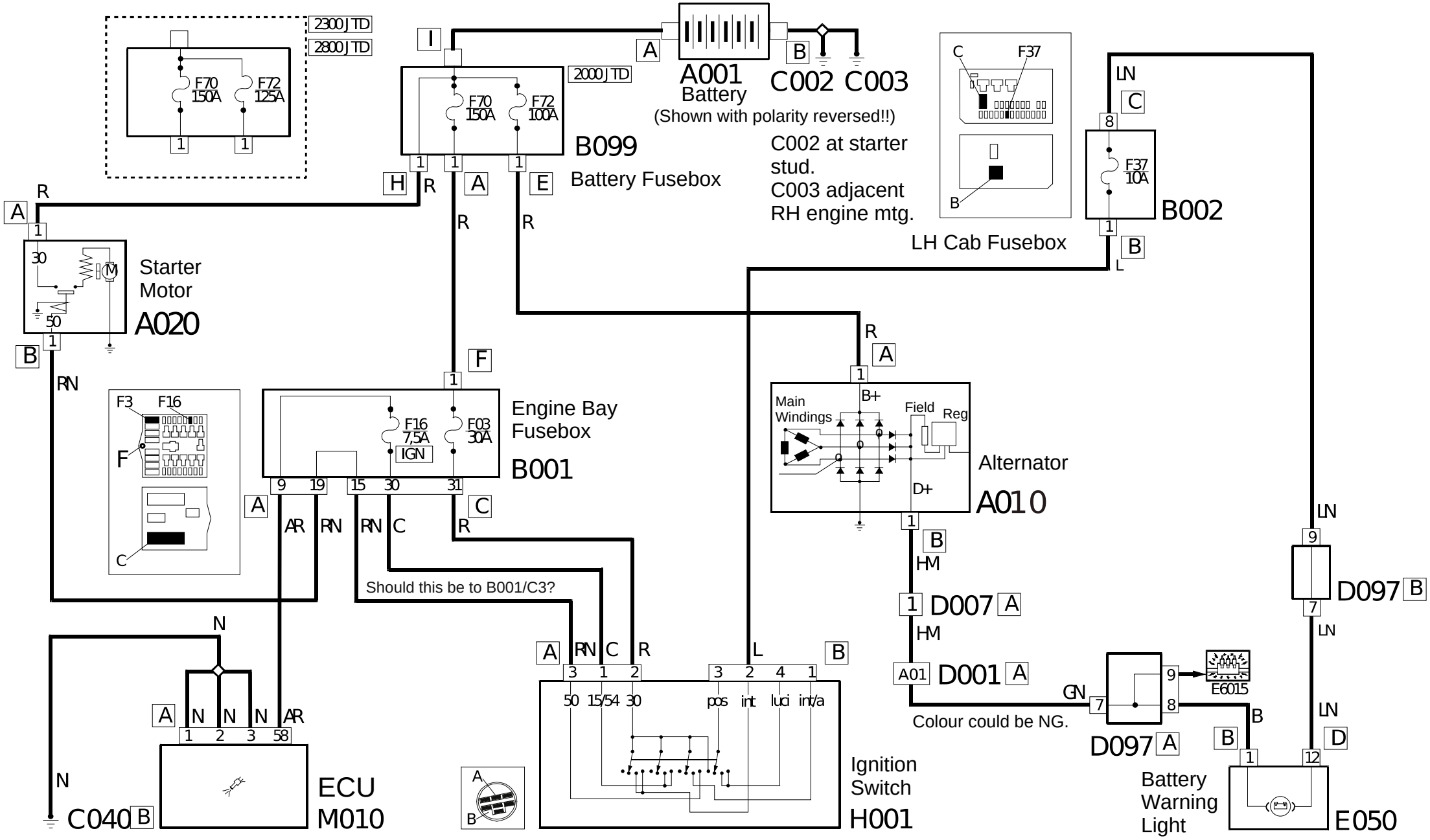
2300 JTD
2800 JTD
F70 150A
F72 125A
2000 JTD
F70 150A
F72 100A
B099
Battery Fusebox
A001
Battery
(Shown with polarity reversed!!)
C002 C003
C002 at starter stud.
C003 adjacent RH engine mtg.
LH Cab Fusebox
F37 10A
B002
Starter Motor
A020
Engine Bay Fusebox
B001
F16 7,5A
IGN
F03 30A
Alternator
A010
Main Windings
B+
Field
Reg
D+
D007
D001
D097
E6015
Should this be to B001/C3?
Colour could be NG.
ECU
M010
C040
Ignition Switch
H001
Battery Warning Light
E050